JF P/N	CURRENT RATING(A)	HOUSING COLOR
ATI-30-h	30	PINK
ATI-40-h	40	GREEN
ATI-50-h	50	RED
ATI-60-h	60	YELLOW
ATI-70-h	70	BROWN
ATI-80-h	80	BLACK
ATI-100-h	100	BLUE
ATI-120-h	120	WHITE
ATI-140-h	140	REDDISH BROWN

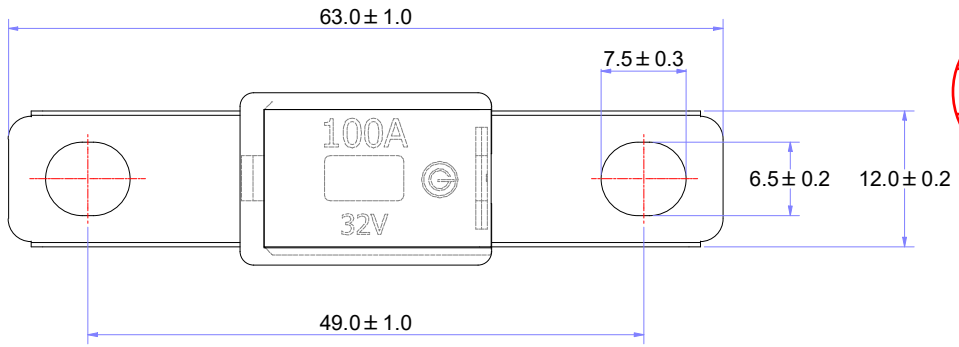

振豐電子
2024.06.27
發行章

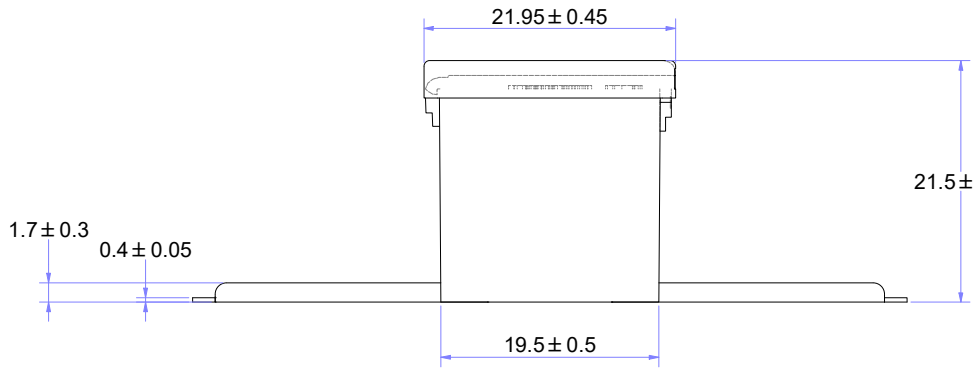

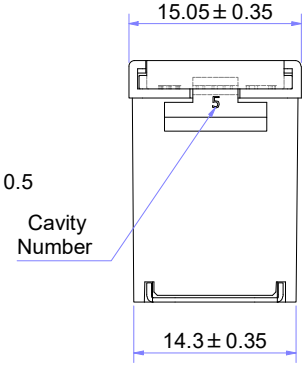

Notes:
1.Voltage Rating: 32V DC
2.Interrupting Rating: 1000A @ 32 VDC
3.Operating temperature range: -40°C to +125°C
4.Body Material: a.PA66 GF33(30~70A)
b.PET GF30(80~140A)
5.Cap Material: a.PC / Transparent(30~70A)
b.PES / Transparent(80~140A)
6.Contacts Material: Copper Alloy
7.Recommended Mounting Torque :
M6 (stud 、washer 、nut): 6.0 Nm +/- 1Nm
8.RoHS Compliant

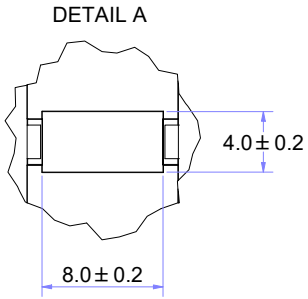

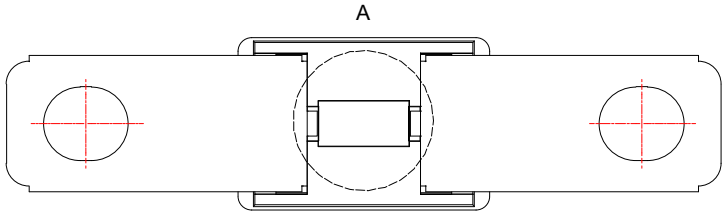

Electrical Characteristics Test
According to ISO 8820-4

% Of Rated Current	Operating Time (s)	
	MIN.	MAX.
110	14,400	-
200	5	100
350	0.2	7
600	0.04	1

UNLESS OTHERWISE SPECIFIED DIMENSIONS ARE IN mm TOLERANCE DECIMALS X±0.5 XX±0.25 ANGULAR ±2° DO NOT SCALE DRAWING THIRD ANGLE PROJECTION		CUSTOMER NO.	JENN FENG ELECTRIC INDUSTRIAL CO., LTD.
		DRAWN BY James	TITLE Fuse Link with Bolt-in Contacts
		CHECKED BY	
		APPROVED BY 林進有	
P/N		DATE 2024/6/20	PART NO. ATI-h SERIES
REV	A	SCALE	DRAWING NO. BA24062003